US009368751B2

(12) **United States Patent**
Heo et al.

(10) **Patent No.: US 9,368,751 B2**
(45) **Date of Patent: Jun. 14, 2016**

(54) **ORGANIC LIGHT EMITTING DISPLAY APPARATUS AND METHOD OF MANUFACTURING THE SAME**

(75) Inventors: **Seong-Kweon Heo**, Yongin (KR); **Ki-Nyeng Kang**, Yongin (KR); **Jong-Hyun Choi**, Yongin (KR)

(73) Assignee: **SAMSUNG DISPLAY CO., LTD.**, Yongin, Gyeonggi-do (KR)

(*) Notice: Subject to any disclaimer, the term of this patent is extended or adjusted under 35 U.S.C. 154(b) by 0 days.

(21) Appl. No.: **13/416,108**

(22) Filed: **Mar. 9, 2012**

(65) **Prior Publication Data**

US 2013/0056735 A1 Mar. 7, 2013

(30) **Foreign Application Priority Data**

Sep. 2, 2011 (KR) 10-2011-0089208

(51) **Int. Cl.**

H01L 51/52 (2006.01)
H01L 27/12 (2006.01)
H01L 29/49 (2006.01)
H01L 27/32 (2006.01)

(52) **U.S. Cl.**

CPC ***H01L 51/5259*** (2013.01); ***H01L 27/1255*** (2013.01); ***H01L 27/3258*** (2013.01); ***H01L 29/4908*** (2013.01); ***H01L 51/5246*** (2013.01); *H01L 27/3246* (2013.01)

(58) **Field of Classification Search**

CPC H01L 51/5246; H01L 51/5259; H01L 27/3258; H01L 27/3246
USPC 257/40
See application file for complete search history.

(56) **References Cited**

U.S. PATENT DOCUMENTS

4,515,874 A * 5/1985 Steinleitner 429/104
6,605,826 B2 * 8/2003 Yamazaki H01L 27/32 257/359
6,958,252 B2 10/2005 Kim
8,581,237 B2 * 11/2013 Ushikubo C09K 11/06 257/40
8,617,725 B2 * 12/2013 Ushikubo C09K 11/06 257/40

(Continued)

FOREIGN PATENT DOCUMENTS

JP 2008-270118 11/2008
KR 10-0495702 6/2005

(Continued)

OTHER PUBLICATIONS

Machine translation, TIPO Office Action, Google Translate (May 5, 2016), all pages.*

(Continued)

Primary Examiner — Victoria K Hall
(74) *Attorney, Agent, or Firm* — Lee & Morse, P.C.

(57) **ABSTRACT**

An organic light-emitting display apparatus includes a thin film transistor on a display region of a substrate, the thin film transistor facing an encapsulation member, an organic light-emitting device on the display region that includes an intermediate layer having an organic emission layer, a sealing member that is between the substrate and the encapsulation member and that surrounds the display region, an internal circuit unit between the display region and the sealing member, a passivation layer that extends to cover the internal circuit unit, a pixel defining layer on the passivation layer, and a getter between the substrate and the encapsulation member, and the getter at least partially overlapping the internal circuit unit.

24 Claims, 10 Drawing Sheets

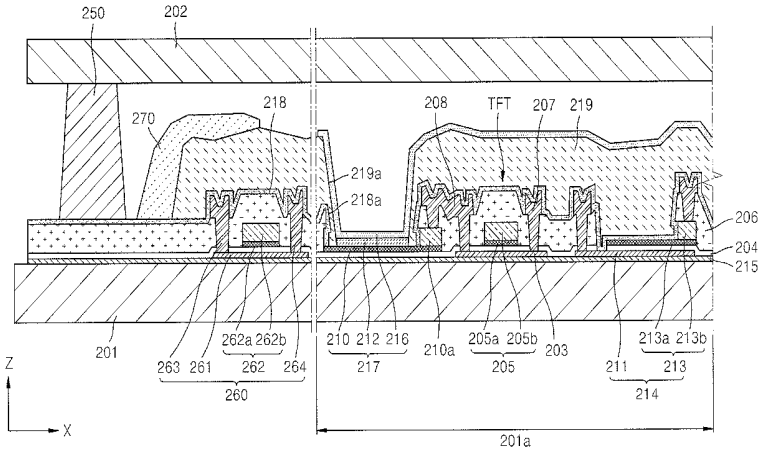

(56) **References Cited**

U.S. PATENT DOCUMENTS

8,673,459	B2 *	3/2014	Seo	C07D 405/04 257/40
8,723,417	B2 *	5/2014	Tsuchiya	H01L 27/3244 313/483
9,190,525	B2 *	11/2015	Yamazaki	H01L 29/7869
2001/0002703	A1 *	6/2001	Koyama	G09G 3/3275 257/40
2002/0044111	A1 *	4/2002	Yamazaki	G09G 3/3266 345/83
2002/0070663	A1 *	6/2002	Ogura et al.	313/506
2004/0195959	A1 *	10/2004	Park et al.	313/500
2004/0232418	A1 *	11/2004	Koyama	H01L 27/3244 257/59
2005/0046346	A1 *	3/2005	Tsuchiya	H01L 27/3244 313/509
2005/0140265	A1 *	6/2005	Hirakata	313/483
2005/0218396	A1 *	10/2005	Tsuchiya et al.	257/13
2007/0187677	A1 *	8/2007	Park	H01L 27/3253 257/40
2007/0228380	A1 *	10/2007	Yoshinaga	257/72
2008/0111125	A1 *	5/2008	Kim et al.	257/40
2008/0143248	A1	6/2008	Endo et al.	
2008/0226902	A1 *	9/2008	Giannantonio et al.	428/336
2008/0303424	A1	12/2008	Mitsuya et al.	
2008/0315756	A1 *	12/2008	Jeon et al.	313/504
2010/0183471	A1 *	7/2010	Liu et al.	419/37
2011/0079786	A1 *	4/2011	Kwon et al.	257/71
2011/0127500	A1 *	6/2011	Ko et al.	257/40
2011/0140107	A1 *	6/2011	Kang et al.	257/57
2011/0248276	A1 *	10/2011	Son et al.	257/65
2012/0024722	A1 *	2/2012	Chen	206/204

FOREIGN PATENT DOCUMENTS

KR	10-2006-0033630	A	4/2006
KR	10-2008-0055717		6/2008
KR	10-2009-0099683	A	9/2009
TW	200307893	A	12/2003

OTHER PUBLICATIONS

Taiwanese Office action dated Mar. 11, 2016 for TW Patent Application No. 101111015; Seong-Kweon Heo, et al.

* cited by examiner

FIG. 1

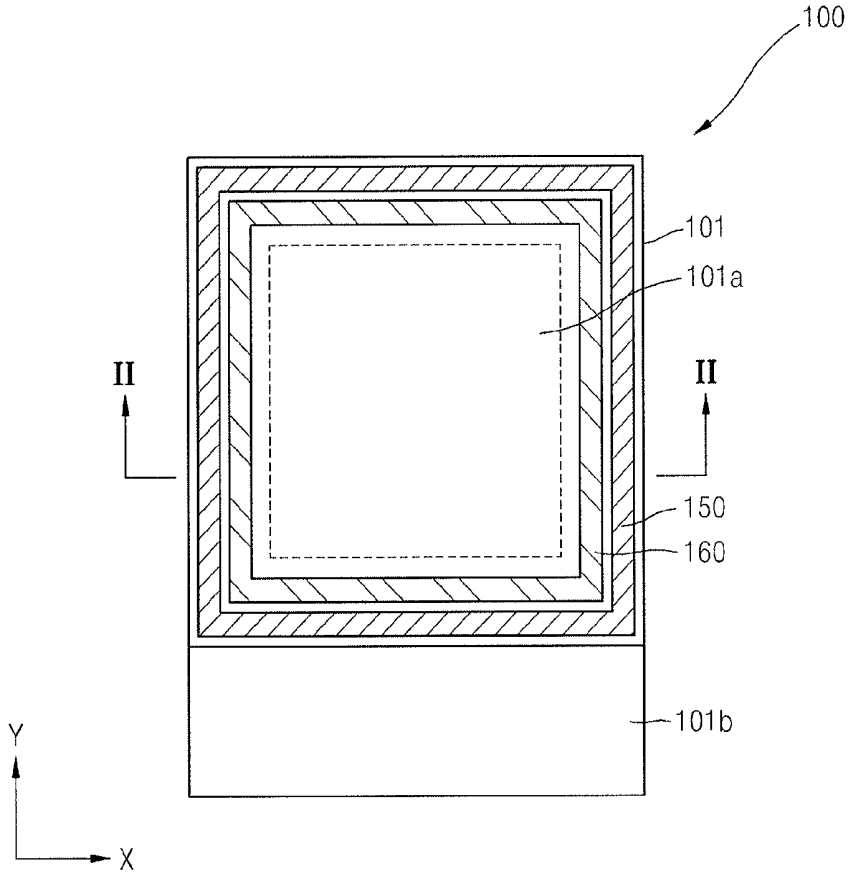
100
101
101a
II
II
150
160
101b
Y
X

FIG. 2

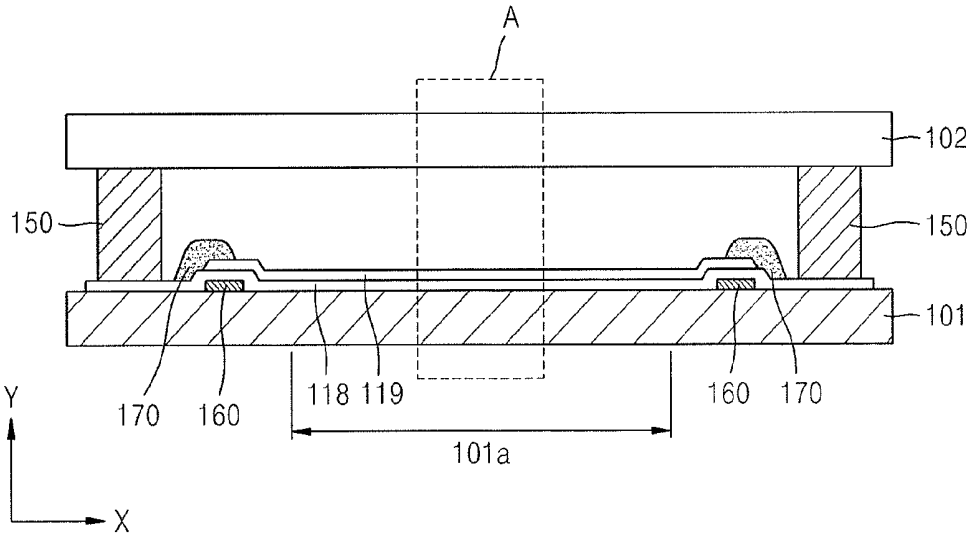
A
102
150
150
101
170
160
118
119
160
170
101a
Y
X

FIG. 3

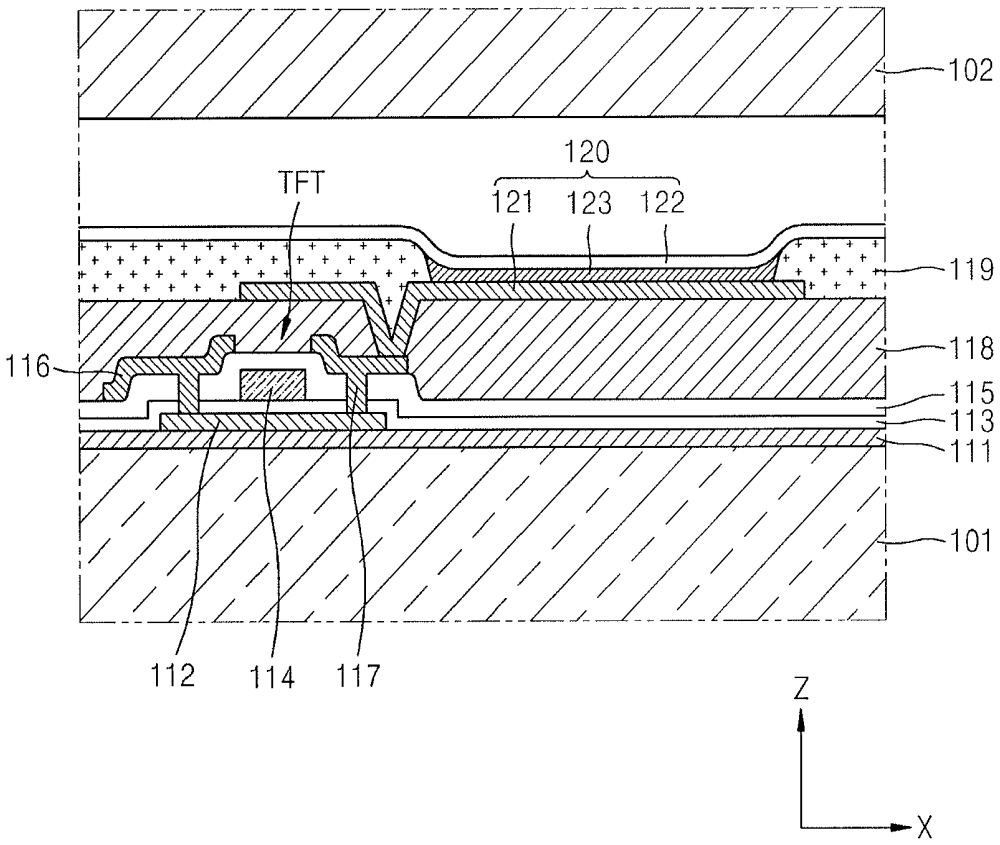
102
120
TFT
121
123
122
119
118
116
115
113
111
101
112
114
117
Z
X

FIG. 4

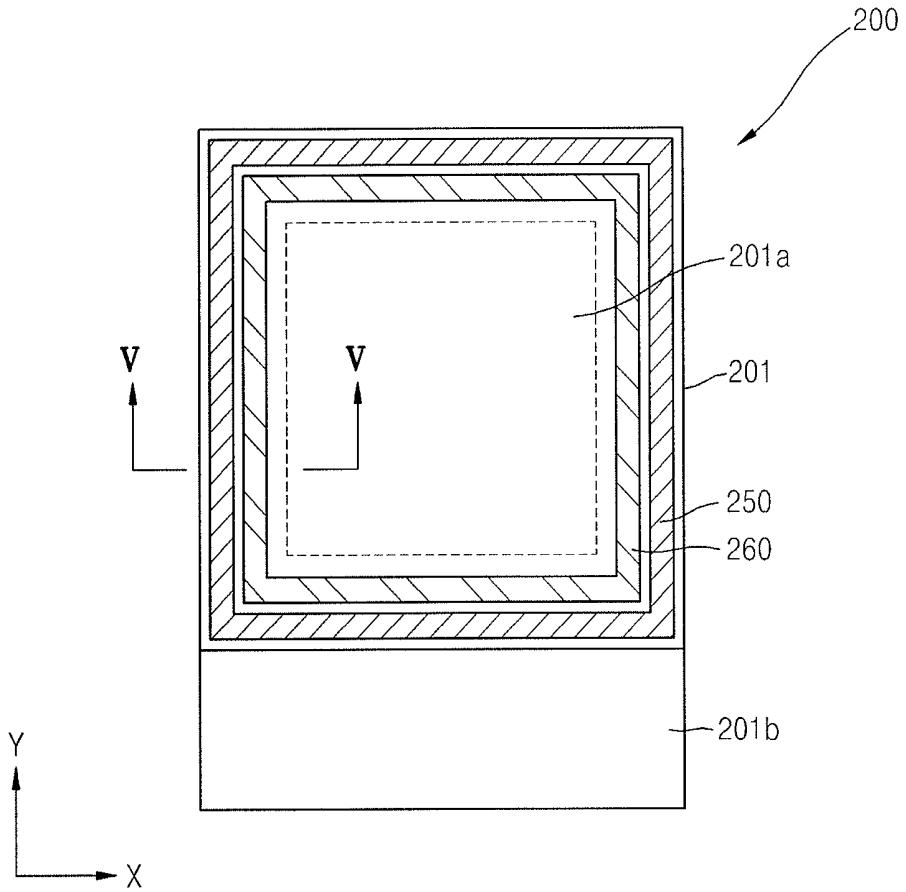

FIG. 5

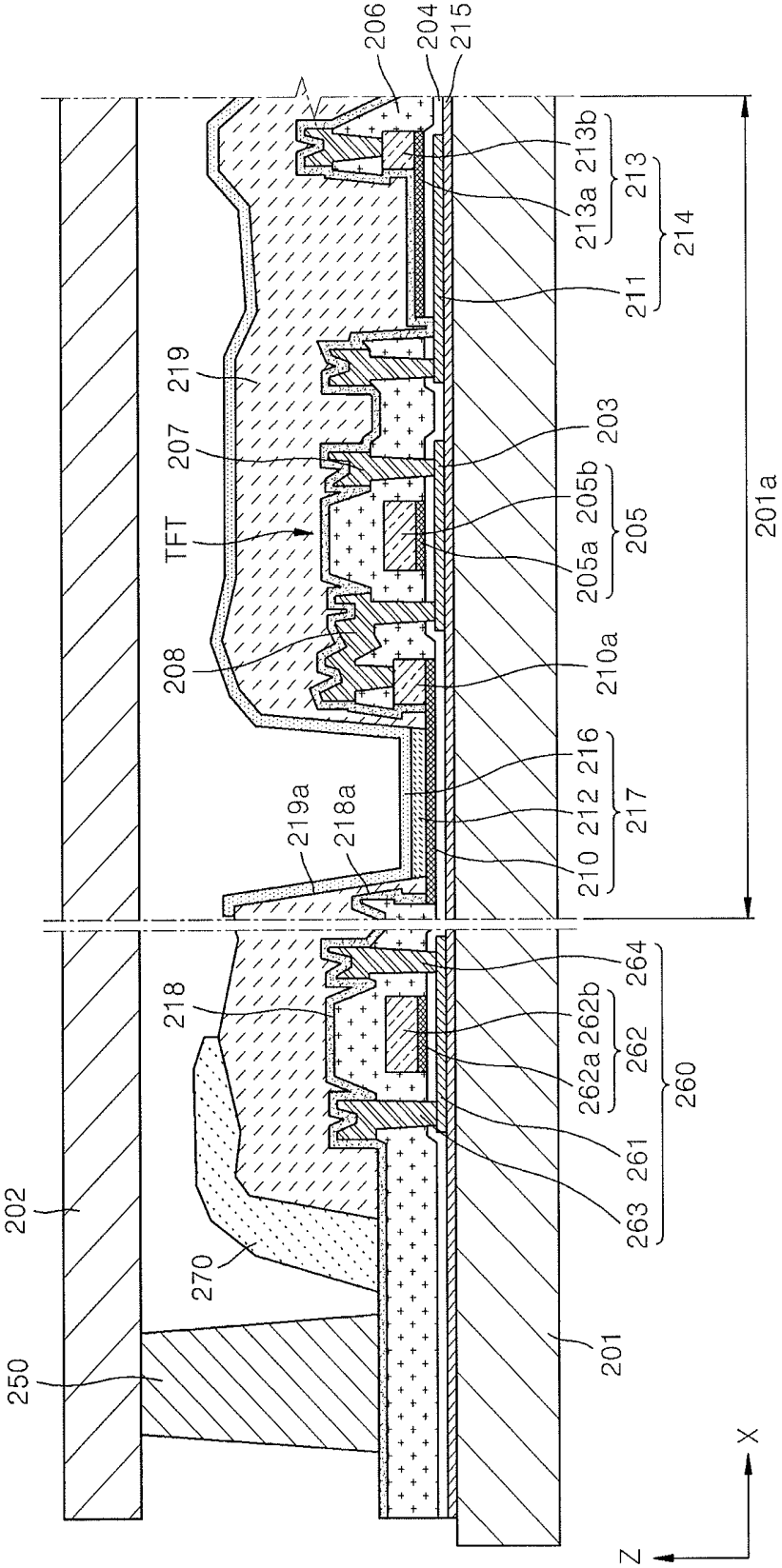
206
204
215
213b
213a
213
214
211
219
207
203
TFT
205b
205a
205
201a
208
210a
216
212
217
210
219a
218a
264
218
262b
262a
262
260
261
263
202
270
201
250
X
Z

FIG. 6A

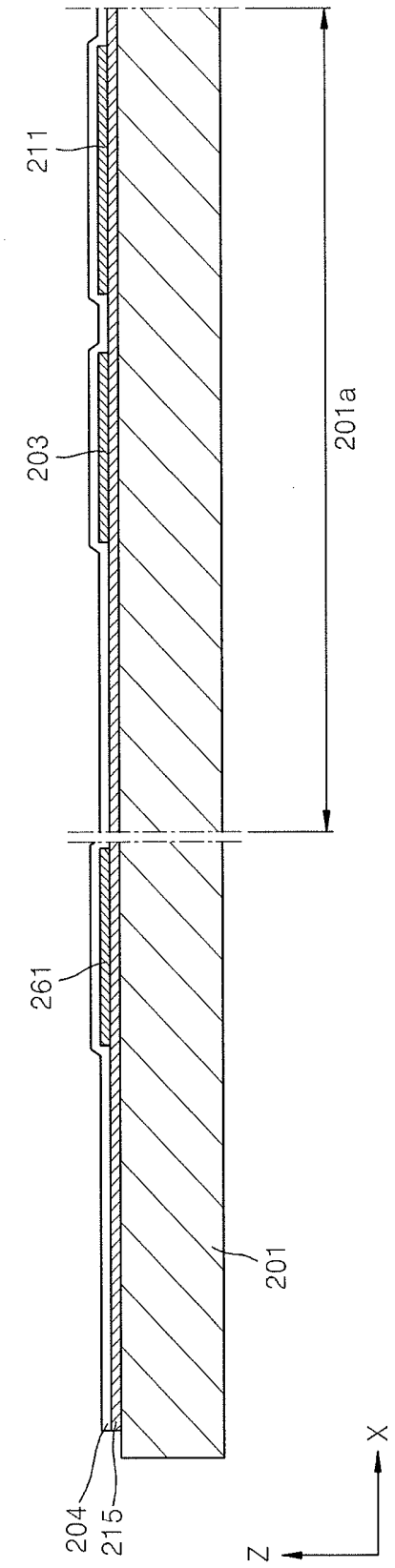

FIG. 6B

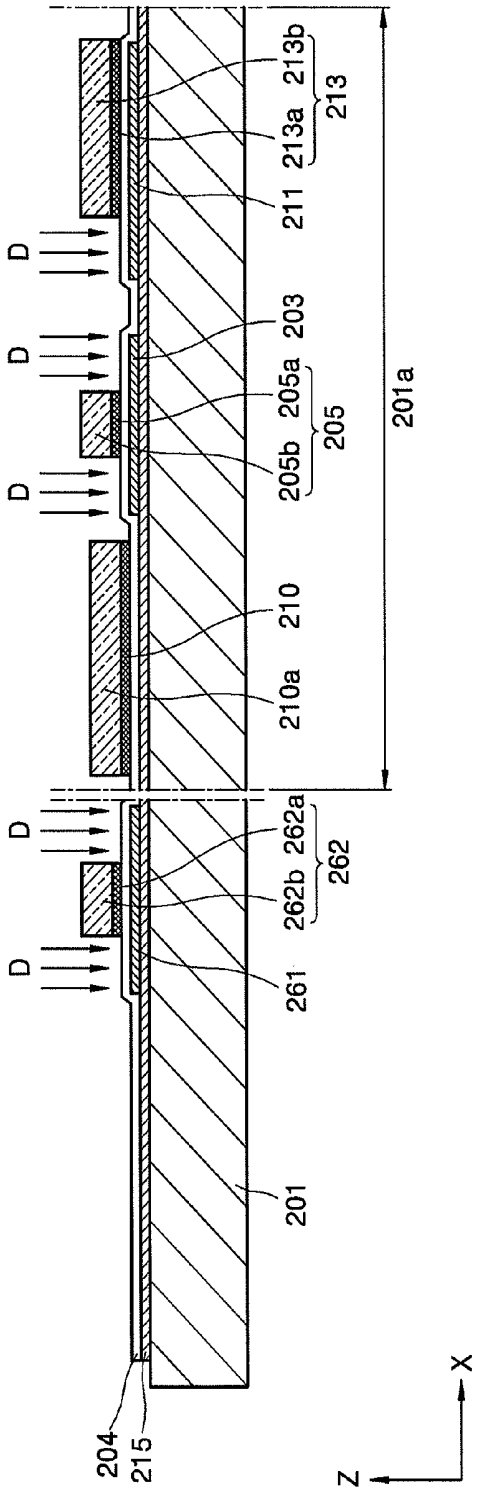
D
D
D
D
D
213b
213a
213
211
203
205a
205
205b
201a
210
210a
262a
262
262b
261
201
204
215
X
Z

FIG. 6C

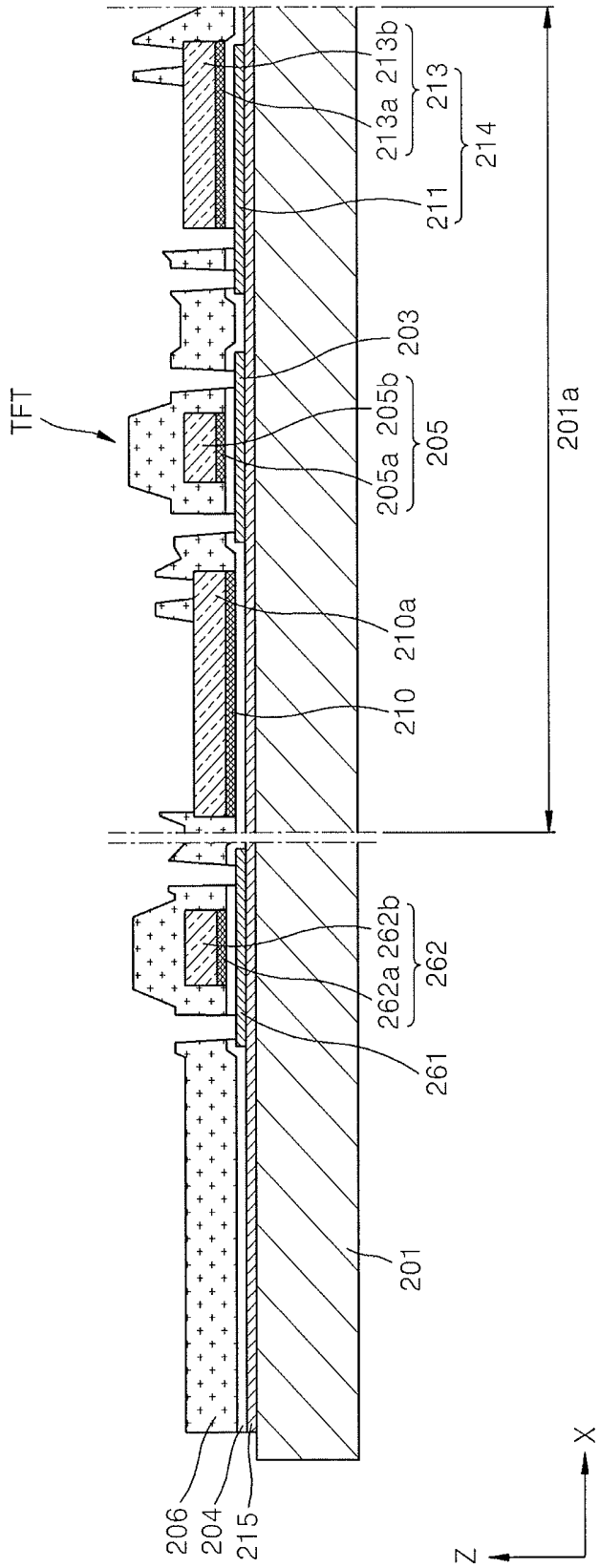
TFT
213b
213a
213
214
211
203
205b
205a
205
210a
210
201a
262b
262a
262
261
201
206
204
215
X
Z

FIG. 6D

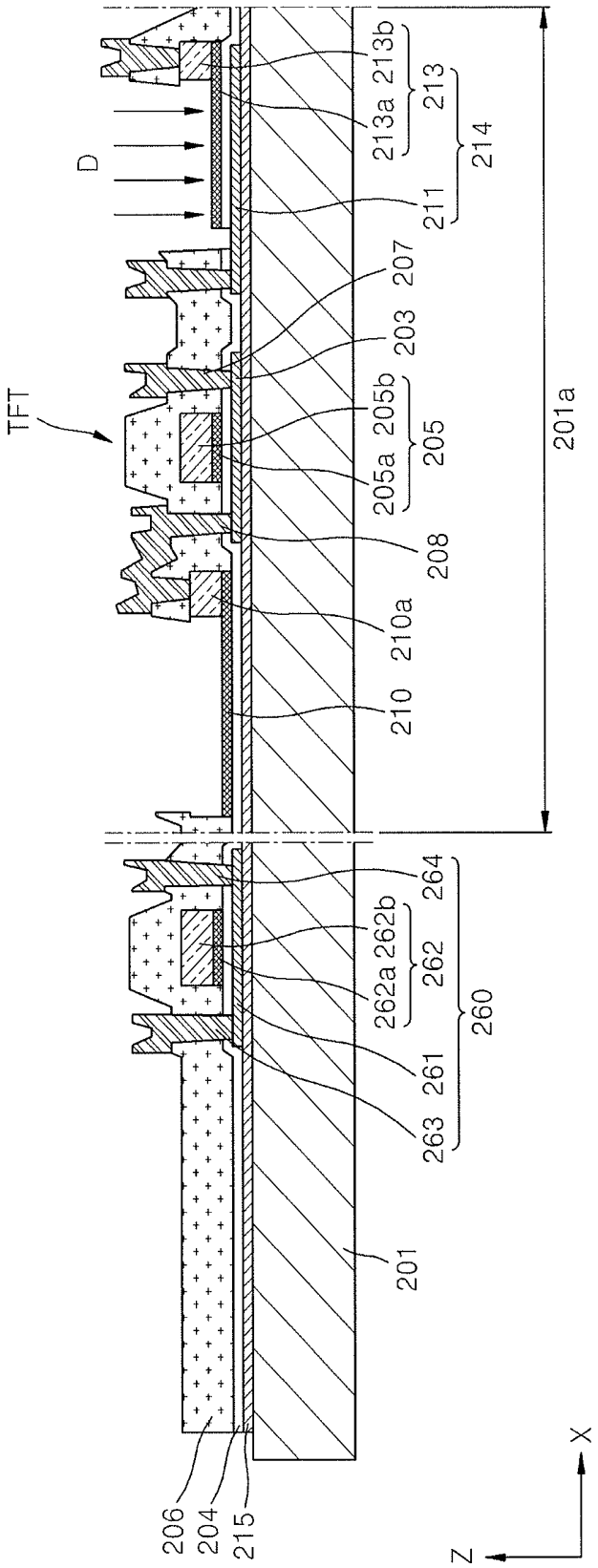
TFT
D
213b
213a
213
214
211
207
203
205b
205a
205
208
210a
210
201a
264
262b
262a
262
260
261
263
201
206
204
215
X
Z

FIG. 6E

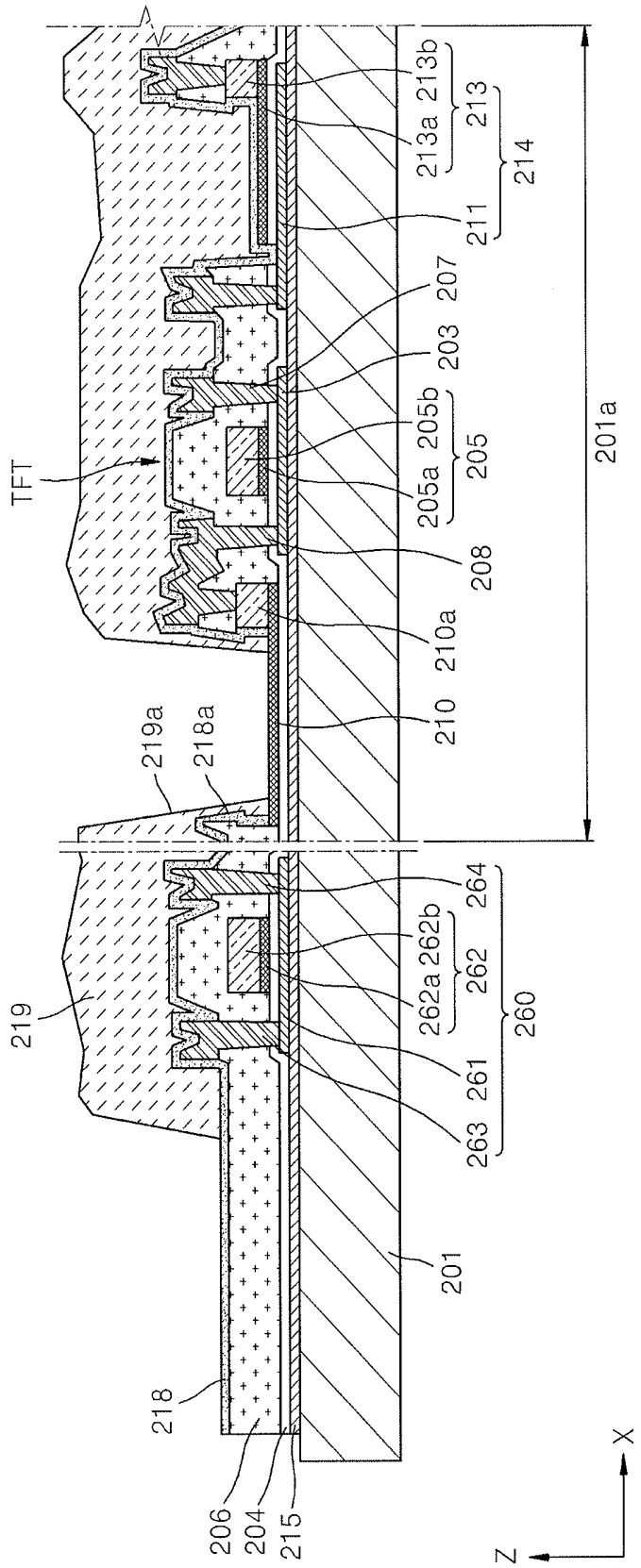
TFT
213b
213a
213
214
211
207
203
205b
205a
205
208
210a
210
201a
219a
218a
264
262b
262a
262
260
261
263
219
201
218
206
204
215
X
Z

FIG. 6F

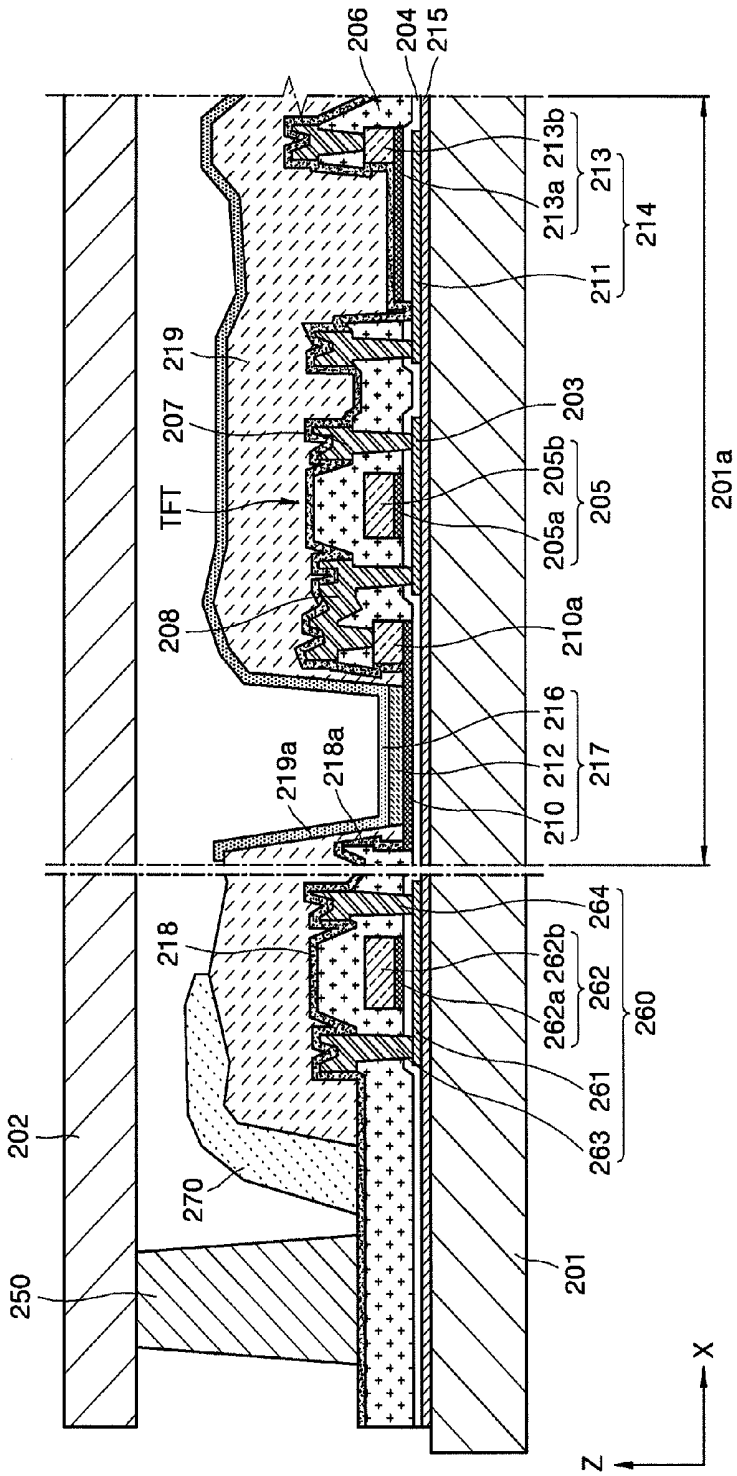
206
204
215
213b
213a
213
214
211
219
207
TFT
208
203
205b
205a
205
210a
216
212
217
210
219a
218a
201a
264
262b
262a
262
260
261
263
218
270
202
250
201
X
Z

ORGANIC LIGHT EMITTING DISPLAY APPARATUS AND METHOD OF MANUFACTURING THE SAME

CROSS-REFERENCE TO RELATED PATENT APPLICATION

This application claims the benefit of Korean Patent Application No. 10-2011-0089208, filed on Sep. 2, 2011, in the Korean Intellectual Property Office, the disclosure of which is incorporated herein in its entirety by reference.

BACKGROUND

Developments in display technology have led to display apparatuses with portable, thin flat panel display devices.

SUMMARY

Embodiments may be realized by providing an organic light-emitting display apparatus including a substrate that has a display region; an encapsulation member that is disposed to face the substrate; a thin film transistor that is disposed on the display region of the substrate to face the encapsulation member and includes an active layer, a gate electrode, and source and drain electrodes; an organic light-emitting device that is formed on the display region to be electrically connected to the thin film transistor and includes a first electrode, a second electrode, and an intermediate layer interposed between the first and second electrodes and including an organic emission layer; a sealing member that is disposed between the substrate and the encapsulation member to surround the display region; an internal circuit unit that is disposed between the display region and the sealing member; a passivation layer that is disposed on the thin film transistor and extends to cover the internal circuit unit; a pixel defining layer that is disposed on the passivation layer; and a getter that is disposed between the substrate and the encapsulation member to at least partially overlap with the internal circuit unit.

The passivation layer may include an inorganic material. The getter may be disposed between the substrate and the encapsulation member and between the sealing member and the display region. The getter may be formed on the passivation layer. The getter may be formed to contact with the pixel defining layer. The getter may include at least one of Ba, Ca, Mg, Ti, V, Zr, Nb, Mo, Ta, Th, Ce, Al, and Ni.

The pixel defining layer may include an organic material. The intermediate layer may be spaced apart from the passivation layer and may be in contact with the pixel defining layer. The organic light-emitting display apparatus may further include a gate insulating layer interposed between the active layer and the gate electrode, and an interlayer insulating layer formed on the gate electrode. The source and drain electrodes may be formed on the interlayer insulating layer.

The first electrode may be formed on the gate insulating layer. The interlayer insulating layer may have a stacked structure of at least two insulating layers. The interlayer insulating layer may be formed by alternately stacking an inorganic material and an organic material. The first electrode may be formed on one of a plurality of insulating layers which is not the uppermost insulating layer.

The organic light-emitting display apparatus may further include a capacitor disposed on the substrate. The capacitor may include a first capacitor electrode that is formed on the same layer as the active layer including the same material as the active layer; and a second capacitor electrode that is formed on the same layer as the gate electrode and includes a material for forming the first electrode. The second capacitor electrode may have a smaller size than the first capacitor electrode.

The first electrode may include a transmissive conductive material. The transmissive conductive material may include at least one of indium tin oxide (ITO), indium zinc oxide (IZO), zinc oxide (ZnO), indium oxide (In_2O_3), indium gallium oxide (IGO), and aluminum zinc oxide (AZO).

The first electrode may be formed by sequentially stacking the transmissive conductive materials on a semi-transmissive metal layer. The first electrode may further include a transmissive conductive material formed under the semi-transmissive metal layer. The semi-transmissive metal layer may include Ag. The intermediate layer may not overlap with the thin film transistor and may be spaced apart from the thin film transistor.

Embodiments may also be realized by providing a method of manufacturing an organic light-emitting display apparatus, the method including forming a thin film transistor that includes an active layer, a gate electrode, and source and drain electrodes on a display region of a substrate between the substrate and an encapsulation member; forming an organic light-emitting device that is disposed on the display region to be electrically connected to the thin film transistor and includes a first electrode, a second electrode, and an intermediate layer interposed between the first and second electrodes and including an organic emission layer; forming a sealing member between the substrate and the encapsulation member to surround the display region; forming an internal circuit unit between the display region and the sealing member; forming a passivation layer disposed on the thin film transistor and extending to cover the internal circuit unit; forming a pixel defining layer on the passivation layer; and forming a getter that at least partially overlaps with the internal circuit unit.

The passivation layer and the pixel defining layer may respectively have an opening corresponding to the upper surface of the first electrode. The opening of the passivation layer may be formed after forming the opening of the pixel defining layer. The opening of the passivation layer may be covered by the pixel defining layer.

BRIEF DESCRIPTION OF THE DRAWINGS

Features will become apparent to those of ordinary skill in the art by describing in detail exemplary embodiments thereof with reference to the attached drawings in which:

FIG. **1** illustrates a schematic plan view of an organic light-emitting display apparatus, according to an exemplary embodiment;

FIG. **2** illustrates a cross-sectional view taken along line II-II of FIG. **1**;

FIG. **3** illustrates an expanded view of a portion A of FIG. **2**;

FIG. **4** illustrates a schematic plan view of an organic light-emitting display apparatus, according to an exemplary embodiment;

FIG. **5** illustrates a cross-sectional view taken along line V-V of FIG. **4**; and

FIGS. **6**A to **6**F illustrate diagrams for sequentially depicting stages in a method of manufacturing an organic light-emitting display apparatus, according to an exemplary embodiment.

DETAILED DESCRIPTION

Example embodiments will now be described more fully hereinafter with reference to the accompanying drawings;

however, they may be embodied in different forms and should not be construed as limited to the embodiments set forth herein. Rather, these embodiments are provided so that this disclosure will be thorough and complete, and will fully convey the scope of the invention to those skilled in the art.

In the figures, the dimensions of layers and regions may be exaggerated for clarity of illustration. It will also be understood that when a layer or element is referred to as being "on" another layer or substrate, it can be directly on the other layer or substrate, or intervening layers may also be present. Further, it will be understood that when a layer is referred to as being "under" another layer, it can be directly under, and one or more intervening layers may also be present. In addition, it will also be understood that when a layer is referred to as being "between" two layers, it can be the only layer between the two layers, or one or more intervening layers may also be present. Like reference numerals refer to like elements throughout.

Expressions such as "at least one of," when preceding a list of elements, modify the entire list of elements and do not modify the individual elements of the list.

FIG. **1** illustrates a schematic plan view of an organic light-emitting display apparatus according to an exemplary embodiment, FIG. **2** illustrates a cross-sectional view taken along line II-II of FIG. **1**, and FIG. **3** illustrates an expanded view of a portion A of FIG. **2**.

Referring to FIGS. **1** to **3**, the organic light-emitting display apparatus **100** includes a substrate **101**, an encapsulation member **102**, a thin film transistor TFT, an organic light-emitting device **120**, a sealing member **150**, an internal circuit unit **160**, a passivation layer **118**, a pixel defining layer **119**, and a getter **170**.

The thin film transistor TFT may include an active layer **112**, a gate electrode **114**, and source and drain electrodes **116** and **117**. The organic light-emitting device **120** may include a first electrode **121**, a second electrode **122**, and an intermediate layer **123**.

Each of the elements will be described in detail.

A display region **101***a* is formed on the substrate **101**. A plurality of sub-pixels may be formed on the display region **101***a*, and each of the sub-pixels may include the organic light-emitting device **120** emitting visible light and at least one thin film transistor TFT connected to the organic light-emitting device **120**.

A pad region **101***b* may be formed at one side of the substrate **101** to be spaced apart, e.g., along a horizontal direction, from the display region **101***a*. An integrated circuit (IC) chip such as a data driving unit and a plurality of pads may be mounted on the pad region **101***b*.

The substrate **101** may be a transparent glass substrate in which silicon dioxide (SiO_2) is used as a main component. However, embodiments are not limited thereto, e.g., a transparent plastic substrate may also be used. In this regard, plastic materials used to form the substrate **101** may include at least one of various organic materials.

The sealing member **150** may be disposed on the substrate **101** and may extend around the display region **101***a*. For example, the sealing member **150** may completely surround the display region **101***a*. The sealing member **150** may be formed of various materials and may join the substrate **101** with the encapsulation member **102**.

The internal circuit unit **160** may be disposed between the display region **101***a* and the sealing member **150**, e.g., the internal circuit unit **160** may completely surround the display region **101***a*. The sealing member **150** may completely surround the internal circuit unit **160**. The internal circuit unit **160** may be, e.g., a scan driving unit or an emission control driving unit. The internal circuit unit **160** of FIG. **1** may surround all sides of the display region **101***a*, e.g., completely surround the display region **101***a*. However, embodiments are not limited thereto, e.g., the internal circuit unit **160** may be formed to correspond to one side of the display region **101***a* or to face two sides of the display region **101***a*.

The passivation layer **118** may be disposed on the thin film transistor TFT of the display region **101***a* and may extend so as to cover the internal circuit unit **160**. In addition, the passivation layer **118** may be formed to be in contact with the sealing member **150**. Accordingly, the binding force between the substrate **101** and the encapsulation member **102** may be increased. The passivation layer **118** includes, e.g., an inorganic material.

The pixel defining layer **119** may be formed on the passivation layer **118**. The pixel defining layer **119** may overlap with a portion of the upper surface of the internal circuit unit **160**. In addition, the pixel defining layer **119** may be in contact with the getter **170**. The pixel defining layer **119** may include an organic material such as a polyimide-based polymer, an acrylic polymer, and/or an olefin-based polymer.

The pixel defining layer **119** may define a region where the intermediate layer **123** of the organic light-emitting device **120** is formed. This will be described later.

The getter **170** may be disposed between the substrate **101** and the encapsulation member **102**. The getter **170** may reduce the possibility of and/or prevent external moisture and oxygen from damaging the organic light-emitting device **120**, the thin film transistor TFT, and other thin films.

The getter **170** may react with moisture or oxygen existing in a space between the substrate **101** and the encapsulation member **102**, resulting in efficiently removing the moisture and oxygen. As a result, the getter **170** reduces the possibility of and/or prevents moisture and oxygen from damaging the organic light-emitting device **120**, the thin film transistor TFT, and other thin films.

The getter **170** includes at least one of Ba, Ca, Mg, Ti, V, Zr, Nb, Mo, Ta, Th, Ce, Al, and Ni. For example, the getter **170** may include an alloy or oxide including at least one material described above.

The getter **170** may overlap with at least one portion of the internal circuit unit **160**. For example, the getter **170** may overhang the internal circuit unit **160** and portions of the passivation layer **118** and the pixel defining layer **119** on the internal circuit unit **160**. The getter **170** includes, e.g., a metal or metal oxide as described above. If the getter **170** overlaps with, e.g., is directly on, the internal circuit unit **160**, the material contained in the getter **170** may diffuse into the internal circuit unit **160**, so that a short-circuit may be generated in the internal circuit unit **160** or other damages may be caused. According to an exemplary embodiment, however, since the passivation layer **118** covers the internal circuit unit **160**, the material contained in the getter **170** may be fundamentally prevented from diffusing into the internal circuit unit **160**. For example, when the passivation layer **118** includes an inorganic material, it may be difficult for the material contained in the getter **170** to diffuse into the passivation layer **118**, so that the internal circuit unit **160** may be efficiently protected.

The display region **101***a* will be described in more detail with reference to FIG. **3**. A buffer layer **111** may be formed on the substrate **101**. The buffer layer **111** may include, e.g., SiO_2 and/or SiNx. The buffer layer **111** may provide a flat surface on the substrate **101** and may reduce the possibility of and/or prevent moisture and impurities from infiltrating into the substrate **101**.

The active layer **112** may be formed on the buffer layer **111**. The active layer **112** includes a semiconductor material, e.g., amorphous silicon or polycrystalline silicon.

A gate insulating layer **113** may be formed on the active layer **112**, and the gate electrode **114** may be formed in a predetermined region of the gate insulating layer **113**. The gate insulating layer **113** may insulate between the active layer **112** and the gate electrode **114** and may include an organic material or an inorganic material such as SiNx or SiO_2.

The gate electrode **114** may be formed of a metal such as Au, Ag, Cu, Ni, Pt, Pd, Al, and Mo, or an alloy of metal such as Al:Nd and Mo:W. However, embodiments are not limited thereto. The gate electrode **114** may be formed of various materials in consideration of, e.g., adhesion, surface smoothness, electrical resistance, and processibility. The gate electrode **114** may be connected to a gate line (not shown) that transmits an electrical signal.

An interlayer insulating layer **115** may be formed on the gate electrode **114**. The interlayer insulating layer **115** and the gate insulating layer **113** may be formed to expose source and drain regions of the active layer **112**, and source and drain electrodes **116** and **117** may be in contact with the exposed regions of the active layer **112**.

The source and drain electrodes **116** and **117** may include a metal such as Au, Pd, Pt, Ni, Rh, Ru, Ir, and Os, or a metal alloy of Al and Mo, such as Al:Nd and MoW. However, embodiments are not limited thereto.

The passivation layer **118** may be formed to cover the source and drain electrodes **116** and **117**. As described above, the passivation layer **118** may be an inorganic insulating layer that includes at least one of, e.g., SiO_2, SiNx, SiON, Al_2O_3, TiO_2, Ta_2O_5, HfO_2, ZrO_2, Barium Strontium Titanate (BST), and Lead Zirconate Titanate (PZT), and the like. However, the embodiments are not limited thereto, e.g., the passivation layer **118** may include various inorganic materials.

The passivation layer **118** may be formed to expose the drain electrode **117**, and the organic light-emitting device **120** may be formed to be connected to the exposed drain electrode **117**. The organic light-emitting device **120** may include the first electrode **121**, the second electrode **122**, and the intermediate layer **123**. In particular, the first electrode **121** may be in contact with the drain electrode **117**.

The intermediate layer **123** may include an organic emission layer that emits visible light when a voltage is applied between the first electrode **121** and the second electrode **122**.

The pixel defining layer **119** may be formed on the first electrode **121** using, e.g., an insulating material. As described above, the pixel defining layer **119** may include an organic material. An opening may be formed in the pixel defining layer **119** to expose the first electrode **121**. The intermediate layer **123** may be formed on the exposed first electrode **121**. Then, the second electrode **122** may be formed to be connected to the intermediate layer **123**.

The first electrode **121** and the second electrode **122** may have polarities of an anode and a cathode, respectively. The polarities of the first electrode **121** and the second electrode **122** may be reversed.

The encapsulation member **102** may be disposed on the second electrode **122**. In the organic light-emitting display apparatus **100**, according to an exemplary embodiment, the encapsulation member **102** may be disposed on the substrate **101**. The substrate **101** and the encapsulation member **102** may be joined with each other by using the sealing member **150**. This structure may reduce the possibility of and/or prevent the organic light-emitting device **120**, the thin film transistor TFT, and other thin films from being damaged by, e.g., external impact, moisture, and oxygen.

The getter **170** may be disposed between the substrate **101** and the encapsulation member **102**. The getter **170** may remove moisture and oxygen infiltrated into space between the substrate **101** and the encapsulation member **102** to efficiently protect the organic light-emitting device **120**, the thin film transistor TFT, and other thin films from being damaged by the moisture and oxygen.

Further, the passivation layer **118** may extend to cover the internal circuit unit **160** when the passivation layer **118** covering the thin film transistor TFT is formed. In particular, the passivation layer **118** may include an inorganic material. Accordingly, even when the getter **170** overlaps the internal circuit unit **160**, materials for forming the getter **170**, e.g., a metal or metal oxide, may be fundamentally prevented from being infiltrated into the internal circuit unit **160** and damaging the internal circuit unit **160**.

As a result, since the getter **170** may be formed not to be horizontally spaced apart from the internal circuit unit **160** but to overlap with, e.g., be above the internal circuit unit **160**, as such, a space between the display region **101***a* and the sealing member **150** may be reduced. Thus, space on the substrate **101** of the organic light-emitting display apparatus **100** may be efficiently used.

In addition, the pixel defining layer **119** may be formed to overlap with the upper surface of the internal circuit unit **160**, so that the possibility of damage of the internal circuit unit **160** may be efficiently reduced and/or prevented by the stacked structure of the passivation layer **118** and the pixel defining layer **119**.

Further, the pixel defining layer **119** may be formed to contact with the getter **170**, so that the infiltration of moisture and oxygen via the sides of the organic light-emitting display apparatus **100** may be efficiently reduced and/or prevented. That is, the getter **170**, the pixel defining layer **119**, and the passivation layer **118** may be sequentially aligned to function as barriers against moisture and oxygen.

FIG. **4** illustrates a schematic plan view of an organic light-emitting display apparatus according to another exemplary embodiment, and FIG. **5** illustrates a cross-sectional view taken along line V-V of FIG. **4**.

Referring to FIGS. **4** to **5**, the organic light-emitting display apparatus **200** includes a substrate **201**, an encapsulation member **202**, a thin film transistor TFT, an organic light-emitting device **217**, a sealing member **250**, an internal circuit unit **260**, a passivation layer **218**, a pixel defining layer **219**, a getter **270**, and a capacitor **214**.

The thin film transistor TFT may include an active layer **203**, a gate electrode **205**, and source and drain electrodes **207** and **208**. The organic light-emitting device **217** may include a first electrode **210**, a second electrode **216**, and an intermediate layer **212**.

The substrate **201** may include a display region **201***a*. A plurality of sub-pixels may be formed on the display region **201***a*, and each of the sub-pixels may include an organic light-emitting device **217** emitting visible light and at least one thin film transistor TFT connected to the organic light-emitting device **217**.

A pad region **201***b* is formed at one side of the substrate **201** to be spaced apart from the display region **201***a*. An integrated circuit (IC) chip such as a data driving unit and a plurality of pads may be mounted on the pad region **201***b*.

The sealing member **250** may be disposed around, e.g., completely surrounding, the display region **201***a* on the sub-

strate **201**. The sealing member **250** may be formed of various materials and may join the substrate **201** with the encapsulation member **202**.

The internal circuit unit **260** may be disposed between the display region **201***a* and the sealing member **250**. The internal circuit unit **260** may completely surround the display region **201***a* and the sealing member **250** may completely surround the internal circuit unit **260**. The internal circuit unit **260** may be, e.g., a scan driving unit or an emission control driving unit. The internal circuit unit **260** of FIG. **4** may surround all sides of the display region **201***a*, but embodiments are not limited thereto. That is, the internal circuit unit **260** may be formed to correspond to one side of the display region **201***a* or to face two sides of the display region **201***a*.

The internal circuit unit **260** shown in FIG. **5** includes a circuit unit-active layer **261**, a circuit unit-gate electrode **262**, a circuit unit-source electrode **263**, and a circuit unit-drain electrode **264**. However, the internal circuit unit **260** is exemplified thereby, and the embodiments are not limited thereto. For example, the internal circuit unit **260** may also have various structures.

The passivation layer **218** may be disposed on the thin film transistor TFT of the display region **201***a* and may extend so as to cover the internal circuit unit **260**. The passivation layer **218** may be formed to be in contact with the sealing member **250**. The passivation layer **218** may include an inorganic material.

The pixel defining layer **219** may be formed on the passivation layer **218**. The pixel defining layer **219** may define a region where the intermediate layer **212** of the organic light-emitting device **220** is formed.

The getter **270** is disposed between the substrate **201** and the encapsulation member **202**. The getter **270** overlaps with at least one portion of the internal circuit unit **260**. Materials used to form the getter **270** are described above, and thus a detailed description thereof will be omitted herein.

The display region **201***a* will be described in more detail with reference to FIG. **5**. A buffer layer **215** may be formed on the substrate **201**. The buffer layer **215** may correspond not only to the display region **201***a* but also to the sealing member **250**.

An active layer **203** may be formed on the buffer layer **215**. A first capacitor electrode **211** may be formed on the buffer layer **215**. The first capacitor electrode **211** may be formed of the same material as the active layer **203**. In addition, the circuit unit-active layer **261** may be formed on the buffer layer **215**, e.g., the circuit-unit active layer **261** may be formed of the same material as the active layer **203**.

A gate insulating layer **204** may be formed on the buffer layer **215** to cover the active layer **203** and the first capacitor electrode **211**. The gate insulating layer **204** may also be formed to cover the display region **201***a* and the circuit unit-active layer **261** to correspond to a region including the sealing member **250**.

The gate electrode **205**, the first electrode **210**, and the second capacitor electrode **213** may be formed on the gate insulating layer **204**. The gate electrode **205** may include a first conductive layer **205***a* and a second conductive layer **205***b*. The first conductive layer **205***a* may include a transmissive conductive material, and examples of the transmissive conductive material include at least one of indium tin oxide (ITO), indium zinc oxide (IZO), zinc oxide (ZnO), indium oxide (In_2O_3), indium gallium oxide (IGO), and aluminum zinc oxide (AZO). The second conductive layer **205***b* may be formed on the first conductive layer **205***a* using a metal or an alloy of the metal, such as Mo, MoW, and an Al-based alloy, but embodiments are not limited thereto.

The first electrode **210** may include a transmissive conductive material and may be formed of the same material as the first conductive layer **205***a*. A conductive unit **210***a* may be disposed on a predetermined region of the first electrode **210** and may be formed of the same material as the second conductive layer **205***b*.

In addition, the first electrode **210** may have a multi-layered structure instead of a single-layered structure. A transmissive conductive layer may be formed on a semi-transmissive metal layer including metal such as Ag. That is, the first electrode **210** may have, e.g., an ITO/Ag structure. In this regard, at least one of IZO, ZnO, In_2O_3, IGO, and AZO may also be used instead of ITO.

The first electrode **210** may also have a triple-layered structure, e.g., an ITO/Ag/ITO structure. In this regard, at least one of IZO, ZnO, In_2O_3, IGO, and AZO may also be used instead of ITO.

Accordingly, visible light generated in the intermediate layer **212** may resonate between the first electrode **210** and the second electrode **216**, thus, potentially resulting in improving light efficiency of the organic light-emitting display apparatus **200**.

The first conductive layer **205***a* of the gate electrode **205** may also have a double-layered or triple-layered structure as the first electrode **210**. The second capacitor electrode **213** may include a first layer **213***a* and a second layer **213***b*. The first layer **213***a* may be formed of the same material as the first conductive layer **205***a*, and the second layer **213***b* may be formed of the same material as the second conductive layer **205***b*. The first layer **213***a* may also have a double-layered or triple-layered structure as the first electrode **210**.

The second layer **213***b* may be formed on the first layer **213***a* to have a smaller size than the first layer **213***a*. In addition, the second capacitor electrode **213** may overlap with the first capacitor electrode **211** to have a smaller size than the first capacitor electrode **211**.

The circuit unit-gate electrode **262** of the internal circuit unit **260** may be formed on the gate insulating layer **204**. The circuit unit-gate electrode **262** may include two layers **262***a* and **262***b* as the gate electrode **205**, and the two layers **262***a* and **262***b* may be respectively formed of the same materials of the first and second conductive layers **205***a* and **205***b* of the gate electrode **205**.

An interlayer insulating layer **206** may be formed on the first electrode **210**, the gate electrode **205**, and the second capacitor electrode **213**. The interlayer insulating layer **206** may include various insulating materials such as organic materials or inorganic materials. The interlayer insulating layer **206** may be formed to correspond not only to the display region **201***a* but also to the sealing member **250** to cover the circuit unit-gate electrode **262**.

Although not shown herein, the interlayer insulating layer **206** may have a multi-layered structure. For example, the interlayer insulating layer **206** may have a stacked structure including at least two layers, such as an inorganic/organic layer. Accordingly, insulating and protecting effects of the interlayer insulating layer **206** may be improved. In this regard, the inorganic layer constituting the interlayer insulating layer **206** may include, e.g., a silicon oxide or a silicon nitride.

If the interlayer insulating layer **206** has a multi-layered structure, the first electrode **210** may be formed on one of a plurality of insulating layers of the interlayer insulating layer **206** that is not the uppermost insulating layer.

Accordingly, the gate electrode **205** and the second capacitor electrode **213** may be formed on a different layer from a layer on which the first electrode **210** is formed. Thus, the first

electrode **210** may not be damaged while forming the gate electrode **205** and the second capacitor electrode **213**.

The source and the drain electrodes **207** and **208** may be formed on the interlayer insulating layer **206**. The source and drain electrodes **207** and **208** may be formed to be connected to the active layer **203**.

In addition, one of the source and drain electrodes **207** and **208** may be electrically connected to the first electrode **210**. In FIG. **5**, the drain electrode **208** may be electrically connected to the first electrode **210**. In particular, the drain electrode **208** may be contacted with the conductive unit **210***a*.

The circuit unit-source electrode **263** and the circuit-unit drain electrode **264** may be formed on the interlayer insulating layer **206** to be connected to the circuit unit-active layer **261**. The circuit unit-source electrode **263** and the circuit unit-drain electrode **264** may be respectively formed of the same material as the source electrode **207** or the drain electrode **208**.

The passivation layer **218** may be formed on the interlayer insulating layer **206** to cover the thin film transistor TFT and capacitor **214**. The passivation layer **218** may have an opening **218***a* corresponding to the upper surface of the first electrode **210**. The passivation layer **218** may be formed on the circuit unit-source electrode **263** and the circuit unit-drain electrode **264**. That is, the passivation layer **218** may be formed to cover the internal circuit unit **260**. In addition, the passivation layer **218** may be formed to correspond to, e.g., be under, the sealing member **250**.

The pixel defining layer **219** may be formed on the passivation layer **218**. The pixel defining layer **219** may be formed to have an opening **219***a* corresponding to the upper surface of the first electrode **210**, and the intermediate layer **212** may be formed on the first electrode **210** exposed via the opening **219***a* of the pixel defining layer **219**. In more detail, the opening **219***a* of the pixel defining layer **219** may correspond to the opening **218***a* of the passivation layer **218** and may have a smaller size than the opening **218***a* of the passivation layer **218**. Thus, the opening **218***a* of the passivation layer **218** may be covered with the pixel defining layer **219**. As a result, the intermediate layer **212** may not be contact with the passivation layer **218** but may be in contact with the pixel defining layer **219**.

The pixel defining layer **219** may include an organic material as described above. The pixel defining layer **219** may overlap with a portion of the upper surface of the internal circuit unit **260** and may be in contact with the getter **270**.

The second electrode **216** may be formed on the intermediate layer **212**. The encapsulation member **202** may be disposed on the second electrode **216**.

In the organic light-emitting display apparatus **200** according to an exemplary embodiment, the encapsulation member **202** may be disposed on the substrate **201**, and the substrate **201** and the encapsulation member **202** may be joined with each other by using the sealing member **250**. This structure may reduce the possibility of and/or prevent the organic light-emitting device **217**, the thin film transistor TFT, and other thin films from being damaged by, e.g., external impact, moisture, and oxygen.

In addition, the getter **270** may be disposed between the substrate **201** and the encapsulation member **202**. The getter **270** may remove moisture and oxygen infiltrated into space between the substrate **201** and the encapsulation member **202** to efficiently prevent the organic light-emitting device **220**, the thin film transistor TFT, and other thin films from being damaged by, e.g., the moisture and oxygen.

In addition, the passivation layer **218** may extend to cover the internal circuit unit **260** when the passivation layer **218** covering the thin film transistor TFT is formed. Accordingly, even when the getter **270** overlaps with the internal circuit unit **260**, materials for forming the getter **270**, e.g., a metal or metal oxide, may be fundamentally prevented from being infiltrated into the internal circuit unit **260** and damaging the internal circuit unit **260**.

As a result, since the internal circuit unit **260** may be stably protected, and the getter **270** may be formed to overlap with the internal circuit unit **260**, space between the display region **201***a* and the sealing member **250** may be reduced. In addition, since the gate electrode **205** and the capacitor **214** may be formed on the same layer using the same material, the thickness of the organic light-emitting display apparatus **200** may be efficiently reduced. Further, since the first electrode **210** may include a semi-transmissive metal layer, visible light generated in the intermediate layer **212** resonates between the first electrode **210** and the second electrode **216**, which may improve light efficiency of the organic light-emitting display apparatus **200**.

FIGS. **6**A to **6**F illustrate diagrams for sequentially depicting stages in a method of manufacturing an organic light-emitting display apparatus according to an exemplary embodiment. In particular, FIGS. **6**A to **6**F depict stages in a method of manufacturing the organic light-emitting display apparatus **200** shown in FIGS. **4** and **5**.

Referring to FIG. **6**A, the buffer layer **215**, the active layer **203**, the first capacitor electrode **211**, and the circuit unit-active layer **261** may be formed on the substrate **201**. In more detail, the buffer layer **215** may be formed on the substrate **201**, and the active layer **203** may be formed on the display region **201***a* to have a predetermined pattern, which is formed on the buffer layer **215**. The first capacitor electrode **211** may be formed to be spaced apart, e.g., along a horizontal direction, from the active layer **203**. The circuit unit-active layer **261** may be formed to be spaced apart, e.g., along the horizontal direction, from the display region **201***a*.

The gate insulating layer **204** may be formed on the buffer layer **215** to cover the active layer **203** and the first capacitor electrode **211**. The gate insulating layer **204** may be formed to cover not only the display region **201***a* but also the circuit unit-active layer **261**.

Then, referring to FIG. **6**B, the gate electrode **205** including the first and second conductive layers **205***a* and **205***b*, the circuit unit-gate electrode **262** including the first and second layers **262***a* and **262***b*, and the second capacitor electrode **213** including the first and second layers **213***a* and **213***b* may be formed on the gate insulating layer **204**. The first electrode **210** and the conductive unit **210***a* may also be formed.

Patterns of the gate electrode **205**, the first electrode **210**, and the conductive unit **210***a* may be simultaneously formed.

The first electrode **210**, the first conductive layer **205***a* of the gate electrode **205**, the first layer **213***a* of the second capacitor electrode **213**, and the first layer **262***a* of the circuit unit-gate electrode **262** may include a transmissive conductive material. Examples of the transmissive conductive material may include at least one of indium tin oxide (ITO), indium zinc oxide (IZO), zinc oxide (ZnO), indium oxide (In_2O_3), indium gallium oxide (IGO), and aluminum zinc oxide (AZO).

The first electrode **210**, the first conductive layer **205***a* of the gate electrode **205**, the first layer **213***a* of the second capacitor electrode **213**, and the first layer **262***a* of the circuit unit-gate electrode **262** may have a multi-layered structure instead of a single-layered structure. A transmissive conductive layer may be formed on a semi-transmissive metal layer including metal such as Ag. For example, a conductive mate-

rial layer may have an ITO/Ag structure. In this regard, at least one of IZO, ZnO, In_2O_3, IGO, and AZO may also be used instead of ITO.

The first electrode **210**, the first conductive layer **205***a* of the gate electrode **205**, the first layer **213***a* of the second capacitor electrode **213**, and the first layer **262***a* of the circuit unit-gate electrode **262** may have a triple-layered structure, e.g., an ITO/Ag/ITO structure. In this regard, IZO, ZnO, In_2O_3, IGO, and AZO may be used instead of ITO.

Then, a dopant D may be injected in a direction shown with an arrow. The dopant may be a variety of elements, e.g., a Group 3 element such as boron (B) or a Group 5 element such as phosphorous (P).

Then, referring to FIG. **6**C, the interlayer insulating layer **206** may be formed on the conductive unit **210***a*, the gate electrode **205**, and the second capacitor electrode **213**. In this regard, an opening may be formed by removing a portion of the interlayer insulating layer **206** to correspond to a predetermined region of the conductive unit **210***a*. A portion of the interlayer insulating layer **206** may be removed to expose a predetermined region of the upper surface of the second layer **213***b* of the second capacitor electrode **213**.

Portions of the interlayer insulating layer **206** and the gate insulating layer **204** may be removed to expose predetermined regions of the active layer **203**, the circuit unit-active layer **261**, and the first capacitor electrode **211**.

Then, referring to FIG. **6**D, the region of the conductive unit **210***a* exposed via the opening of the interlayer insulating layer **206** may be removed to expose the first electrode **210**. The region of the second layer **213***b* of the second capacitor electrode **213** exposed via the opening of the interlayer insulating layer **206** may be removed to expose the first layer **213***a* of the second capacitor electrode **213**.

The source and drain electrodes **207** and **208** may be formed to be connected to the active layer **203**, and the circuit unit-source electrode **263** and the circuit unit-drain electrode **264** may be formed to be connected to the circuit unit-active layer **261**. Accordingly, the thin film transistor TFT and the internal circuit unit **260** may be prepared.

Then, the dopant D may be injected into the first capacitor electrode **211** in a direction shown with an arrow. That is, the dopant D may be injected into the first capacitor electrode **211** via the first layer **213***a* of the second capacitor electrode **213**.

Then, referring to FIG. **6**E, the passivation layer **218** may be formed on the interlayer insulating layer **206** to cover the thin film transistor TFT and the capacitor **214**.

The passivation layer **218** may have an opening **218***a* corresponding to the upper surface of the first electrode **210**. The passivation layer **218** may be formed on the circuit unit-source electrode **263** and the circuit unit-drain electrode **264**. That is, the passivation layer **218** may be formed to cover the internal circuit unit **260**.

The pixel defining layer **219** may be formed on the passivation layer **218**. The pixel defining layer **219** may be formed to have an opening **219***a* corresponding to the upper surface of the first electrode **210**, and the opening **219***a* of the pixel defining layer **219** may correspond to the opening **218***a* of the passivation layer **218** to have a smaller size than the opening **218***a* of the passivation layer **218**. Thus, the opening **218***a* of the passivation layer **218** may be covered with the pixel defining layer **219**.

The pixel defining layer **219** may overlap with a portion of the upper surface of the internal circuit unit **260**.

The opening **218***a* of the passivation layer **218** may be formed using the opening **219***a* of the pixel defining layer **219** without using a separate mask. For example, a material for forming the passivation layer **218** and a material for forming the pixel defining layer **219** may be sequentially stacked. Then, the material for forming the pixel defining layer **219** may be patterned to form the opening **219***a* of the pixel defining layer **219**. Then, the material for forming the passivation layer **218** may be etched via the opening **219***a* of the pixel defining layer **219** to form the opening **218***a* of the passivation layer **218**. In this regard, the passivation layer **218** may be partially exposed via the opening **219***a* of the pixel defining layer **219**. A portion of the pixel defining layer **219** may be melted by heat-treatment to flow into the opening **218***a* of the passivation layer **218**, so that the opening **218***a* of the passivation layer **218** may be covered with the pixel defining layer **219**, and the passivation layer **218** may not be exposed by the opening **219***a* of the pixel defining layer **219**.

That is, as shown in FIG. **6**E, the size of the opening **219***a* of the pixel defining layer **219** is smaller than that of the opening **218***a* of the passivation layer **218** corresponding to the first electrode **210**, and the opening **218***a* of the passivation layer **218** may be spaced apart from the opening **219***a* of the pixel defining layer **219**.

Then, referring to FIG. **6**F, the intermediate layer **212** may be formed on the first electrode **210**, and the second electrode **216** may be formed on the intermediate layer **212** to prepare the organic light-emitting device **217**.

The sealing member **250** may be disposed around the display region **201***a* on the substrate **201**. The encapsulation member **202** may be disposed to face the substrate **201**, and the substrate **201** and the encapsulation member **202** may be joined with each other by using the sealing member **250**.

The getter **270** may be disposed between the substrate **201** and the encapsulation member **202**. The getter **270** may overlap with at least one portion of the internal circuit unit **160**. The getter **270** may be formed on the passivation layer **218**. The getter **270** may be formed to be in contact with the pixel defining layer **219**.

As described above, according to the one or more of the above exemplary embodiments, the organic light-emitting display apparatus may have excellent durability and high spatial availability on the substrate.

By way of summation and review, from among the flat panel devices, an organic light-emitting display apparatus, which is a self-emissive display apparatus, has a wide viewing angle, high contrast ratio, and high response speed, and thus has been considered as the next-generation display apparatus. An organic light-emitting display apparatus may include a first electrode, a second electrode, and an intermediate layer. The intermediate layer includes an organic emission layer that emits visible light when a voltage is applied to the first and second electrodes. The organic light-emitting display apparatus includes a plurality of pixels and a circuit unit that drives the pixels. A plurality of thin films and the circuit unit constituting the organic light-emitting display apparatus may be vulnerable to external moisture and oxygen. Thus, durability of the organic light-emitting display apparatus may be deteriorated.

In contrast, embodiments, e.g., the exemplary embodiments discussed above, relate to an organic light-emitting display apparatus having excellent durability and high spatial availability on a substrate and a method of manufacturing the organic light-emitting display apparatus.

Example embodiments have been disclosed herein, and although specific terms are employed, they are used and are to be interpreted in a generic and descriptive sense only and not for purpose of limitation. In some instances, as would be apparent to one of ordinary skill in the art as of the filing of the present application, features, characteristics, and/or elements described in connection with a particular embodiment may be

used singly or in combination with features, characteristics, and/or elements described in connection with other embodiments unless otherwise specifically indicated. Accordingly, it will be understood by those of skill in the art that various changes in form and details may be made without departing from the spirit and scope of the present invention as set forth in the following claims.

What is claimed is:

1. An organic light-emitting display apparatus, comprising:

a substrate that includes a display region;

an encapsulation member facing the substrate;

a thin film transistor on the display region of the substrate, the thin film transistor facing the encapsulation member and including an active layer, a gate electrode, and source and drain electrodes;

an organic light-emitting device on the display region, the organic light-emitting device being electrically connected to the thin film transistor and including a first electrode, a second electrode, and an intermediate layer interposed between the first and second electrodes, and the intermediate layer including an organic emission layer;

a sealing member between the substrate and the encapsulation member, the sealing member surrounding the display region;

an internal circuit unit between the display region and the sealing member;

a passivation layer on the thin film transistor and extending to cover the internal circuit unit;

a pixel defining layer on the passivation layer; and

a getter between the substrate and the encapsulation member, the getter at least partially overlapping a top surface of the internal circuit unit, the getter being not directly connected to the second electrode and spaced apart from the sealing member,

wherein the getter is over and directly contacts the pixel defining layer, at least a portion of the pixel defining layer being formed between the passivation layer and the getter, a portion of the getter being between the sealing member and the pixel defining layer, the portion of the getter between the sealing member and the pixel defining layer directly contacting the pixel defining layer, and the getter includes a material that reacts with moisture or oxygen infiltrated into a space between the substrate and the encapsulation member.

2. The organic light-emitting display apparatus of claim **1**, wherein the passivation layer includes an inorganic material.

3. The organic light-emitting display apparatus of claim **1**, wherein the getter is on the passivation layer, the passivation layer completely covering the top surface of the internal circuit unit.

4. The organic light-emitting display apparatus of claim **3**, wherein the getter is further between the sealing member and the display region, the getter at least partially overlapping a top surface of the pixel defining layer that faces away from the internal circuit unit.

5. The organic light-emitting display apparatus of claim **3**, wherein the getter continuously extends from a top surface of the passivation layer to a top surface of the pixel defining layer along an edge of the pixel defining layer, the getter being in contact with the pixel defining layer.

6. The organic light-emitting display apparatus of claim **1**, wherein the pixel defining layer includes an organic material and a portion of an upper surface of the pixel defining layer is exposed via an opening between the getter and the second electrode.

7. The organic light-emitting display apparatus of claim **1**, wherein

the intermediate layer is spaced apart from the passivation layer and is in contact with the pixel defining layer.

8. The organic light-emitting display apparatus of claim **1**, further comprising:

a gate insulating layer between the active layer and the gate electrode, and

an interlayer insulating layer on the gate electrode, the source and drain electrodes being on the interlayer insulating layer.

9. The organic light-emitting display apparatus of claim **8**, wherein the first electrode is on the gate insulating layer.

10. The organic light-emitting display apparatus of claim **8**, wherein the interlayer insulating layer has a stacked structure including at least two insulating layers.

11. The organic light-emitting display apparatus of claim **10**, wherein the interlayer insulating layer includes an inorganic material and an organic material alternately stacked therein.

12. The organic light-emitting display apparatus of claim **10**, wherein the first electrode on one of a plurality of insulating layers that is not an uppermost insulating layer.

13. The organic light-emitting display apparatus of claim **1**, further comprising a capacitor on the substrate, wherein the capacitor includes:

a first capacitor electrode on a same layer as the active layer and including a same material as the active layer, and

a second capacitor electrode on a same layer as the gate electrode and including a same material as the first electrode.

14. The organic light-emitting display apparatus of claim **13**, wherein the second capacitor electrode has a smaller size than the first capacitor electrode.

15. The organic light-emitting display apparatus of claim **1**, wherein the first electrode includes a transmissive conductive material.

16. The organic light-emitting display apparatus of claim **15**, wherein the transmissive conductive material includes at least one of indium tin oxide, indium zinc oxide, zinc oxide, indium oxide, indium gallium oxide, or aluminum zinc oxide.

17. The organic light-emitting display apparatus of claim **1**, wherein the first electrode includes a transmissive conductive material on a semi-transmissive metal layer.

18. The organic light-emitting display apparatus of claim **17**, wherein the first electrode includes a second transmissive conductive material under the semi-transmissive metal layer.

19. The organic light-emitting display apparatus of claim **17**, wherein the semi-transmissive metal layer includes Ag.

20. The organic light-emitting display apparatus of claim **1**, wherein the intermediate layer is in a non-overlapping relationship with the thin film transistor and is spaced apart from the thin film transistor.

21. An organic light-emitting display apparatus, comprising:

a substrate that includes a display region;

an encapsulation member facing the substrate;

a thin film transistor on the display region of the substrate, the thin film transistor facing the encapsulation member and including an active layer, a gate electrode, and source and drain electrodes;

an organic light-emitting device on the display region, the organic light-emitting device being electrically connected to the thin film transistor and including a first electrode, a second electrode, and an intermediate layer

interposed between the first and second electrodes, and the intermediate layer including an organic emission layer;

a sealing member between the substrate and the encapsulation member, the sealing member surrounding the display region;

an internal circuit unit between the display region and the sealing member;

a passivation layer on the thin film transistor and extending to cover the internal circuit unit;

a pixel defining layer on the passivation layer; and

a getter between the substrate and the encapsulation member, the getter at least partially overlapping the internal circuit unit,

wherein the getter is over and directly contacts the pixel defining layer, a portion of the getter is between the sealing member and the pixel defining layer, the portion of the getter between the sealing member and the pixel defining layer directly contacting the pixel defining layer, and the getter includes a material that reacts with moisture or oxygen infiltrated into a space between the substrate and the encapsulation member, the material including at least one of Ca, Mg, V, Zr, Nb, Ta, Th, Ce, or Ni, or an oxide including at least one of Ca, Mg, Ti, V, Zr, Nb, Mo, Ta, Th, Ce, Al, or Ni.

22. A method of manufacturing an organic light-emitting display apparatus, the method comprising:

forming a thin film transistor that includes an active layer, a gate electrode, and source and drain electrodes on a display region of a substrate;

forming an organic light-emitting device on the display region, the organic light-emitting device being electrically connected to the thin film transistor and including a first electrode, a second electrode, and an intermediate layer interposed between the first and second electrodes, and the intermediate layer including an organic emission layer;

forming a sealing member between the substrate and an encapsulation member, the sealing member surrounding the display region, and the thin film transistor being between the substrate and the encapsulation member;

forming an internal circuit unit between the display region and the sealing member;

forming a passivation layer on the thin film transistor, the passivation layer extending to cover the internal circuit unit;

forming a pixel defining layer on the passivation layer; and

forming a getter that at least partially overlaps a top surface of the internal circuit unit, is not directly connected to the second electrode, and is spaced apart from the sealing member,

wherein the getter is over and directly contacts the pixel defining layer, at least a portion of the pixel defining layer being formed between the passivation layer and the getter, a portion of the getter being between the sealing member and the pixel defining layer, the portion of the getter between the sealing member and the pixel defining layer directly contacting the pixel defining layer, and the getter includes a material that reacts with moisture or oxygen infiltrated into a space between the substrate and the encapsulation member.

23. The method of claim **22**, wherein the passivation layer and the pixel defining layer, respectively, have formed therein an opening corresponding to an upper surface of the first electrode, the opening of the passivation layer being formed after the opening of the pixel defining layer is formed.

24. The method of claim **23**, wherein edges of the opening of the passivation layer are covered by the pixel defining layer.

* * * * *

专利名称(译)	有机发光显示装置及其制造方法		
公开(公告)号	US9368751	公开(公告)日	2016-06-14
申请号	US13/416108	申请日	2012-03-09
[标]申请(专利权)人(译)	HEO SEONG KWEON 康KI NYENG 崔钟HYUN		
申请(专利权)人(译)	HEO，晟KWEON 康，KI-NYENG CHOI，JONG-HYUN		
当前申请(专利权)人(译)	三星DISPLAY CO.，LTD.		
[标]发明人	HEO SEONG KWEON KANG KI NYENG CHOI JONG HYUN		
发明人	HEO, SEONG-KWEON KANG, KI-NYENG CHOI, JONG-HYUN		
IPC分类号	H01L51/52 H01L29/49 H01L27/12 H01L27/32		
CPC分类号	H01L51/5259 H01L27/1255 H01L27/3258 H01L29/4908 H01L51/5246 H01L27/3246 H01L23/26		
优先权	1020110089208 2011-09-02 KR		
其他公开文献	US20130056735A1		
外部链接	Espacenet USPTO		

摘要(译)
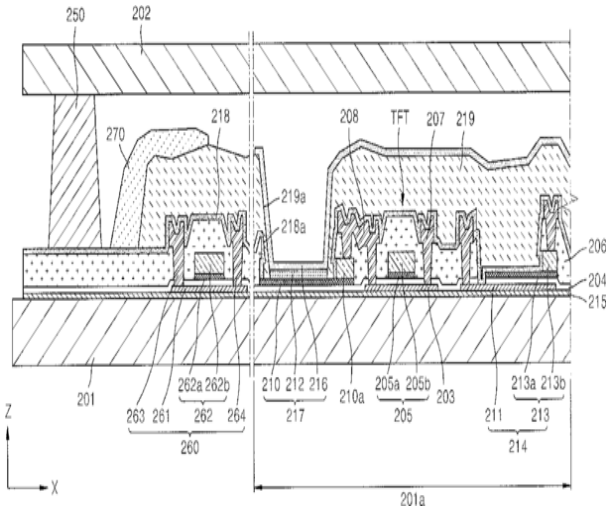
一种有机发光显示装置，包括：薄膜晶体管，位于基板的显示区域上，薄膜晶体管面对封装构件;显示区域上的有机发光装置，包括具有有机发光层的中间层，密封构件，位于基板和封装构件之间并围绕显示区域，显示区域和密封构件之间的内部电路单元，延伸以覆盖内部电路单元的钝化层，位于其上的像素限定层钝化层和基板与封装构件之间的吸气剂，以及吸气剂至少部分地与内部电路单元重叠。